PLEASE SIGN AND RETURN THIS COPY AFTER EVALUATION. THANK YOU!

承　　認　　書

SPECIFICATION FOR APPROVAL

CUSTOMER : _____

CUSTOMER'S PART NO. _____

PROD. NAME: WOUND CHIP INDUCTOR

DWG NO. GWI-453232-□□□□

DATE: June 18, 2013.

	〝V〞	CUSTOMER'S SIGNATURE	NOTE
FULL APPROVED			
CONDITIONAL APPROVED			

DRAWN	CHECKED	APPROVED

G-CHEN ENTERPRISE CO;LTD.

SPECIFICATION FOR APPROVAL

PROD. NAME	WOUND CHIP INDUCTOR	DWG. NO: GWI-453232-□□□□

Ⅰ・CONFIGURATION & DIMENSIONS :

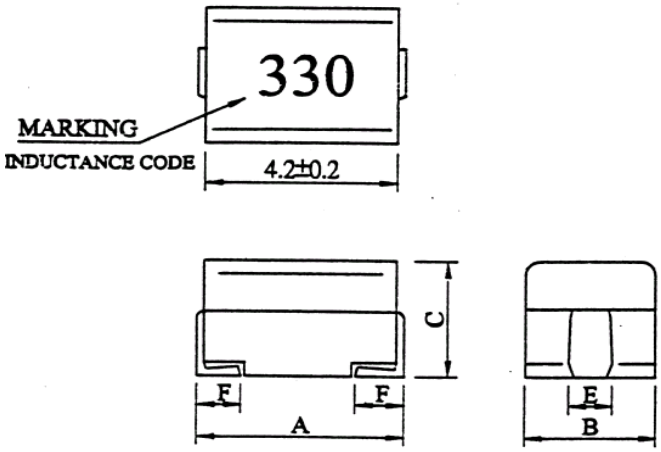

A : 4.5±0.3 m/m
B : 3.2±0.2 m/m
C : 3.2±0.2 m/m
E : 1.2 m/m
F : 1.0 m/m

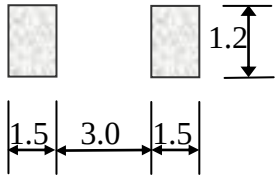

(PCB PATTERN)

Ⅱ・SCHEMATIC DIAGRAM：

Ⅲ・MATERIALS :

- CORE：FERRITE DR CORE
- WIRE：ENAMELLED COPPER WIRE
- TERMINAL：TINNED COPPER FLAT
- ENCAPSULATE：EPOXY NOVOLAC MOLDING COMPOUND

Ⅳ・GENERAL SPECIFICATION :

- TEMP. RISE：20℃ MAX
- AMBIENT TEMP.：80℃ MAX
- STORAGE TEMP.：-40℃…+100℃
- OPERATING TEMP.：-30℃…+100℃
- TERMINAL STRENGTH ：1.0 KG MIN
- RATED CURRENT :CURRENT CAUSE INDUCTANCE DROP WTTHIN 10%
- RESISTANCE TO SOLDER HEAT：260℃.10 SECS.
- RESISTANCE TO SOLVENT：PER MIL-STD-202F

G-CHEN ENTERPRISE CO;LTD.

SPECIFICATION FOR APPROVAL

PROD. NAME	WOUND CHIP INDUCTOR	DWG. NO: GWI-453232-□□□□

V．ELECTRICAL CHARACTERISTICS：

Tolerance J=±5%，K=±10%，M=±20%

Part Number	Inductance(μH)	Q Min	LQ Test Frequency（MHz）.	Self Resonant Frequency（MHz）Min.	DC Resistance Rdc（Ω）Max.	Rated Current Idc（mA）Max.
GWI-453232-R10	0.10	35	25.2	300	0.180	800
GWI-453232-R12	0.12	35	25.2	280	0.200	770
GWI-453232-R15	0.15	35	25.2	250	0.220	730
GWI-453232-R18	0.18	35	25.2	220	0.240	700
GWI-453232-R22	0.22	40	25.2	200	0.250	665
GWI-453232-R27	0.27	40	25.2	180	0.260	635
GWI-453232-R33	0.33	40	25.2	165	0.280	605
GWI-453232-R39	0.39	40	25.2	150	0.300	575
GWI-453232-R47	0.47	40	25.2	145	0.320	545
GWI-453232-R56	0.56	40	25.2	140	0.360	520
GWI-453232-R68	0.68	40	25.2	135	0.400	500
GWI-453232-R82	0.82	40	25.2	130	0.450	475
GWI-453232-1R0	1.00	50	7.96	100	0.500	450
GWI-453232-1R2	1.20	50	7.96	80	0.550	430
GWI-453232-1R5	1.50	50	7.96	70	0.600	410
GWI-453232-1R8	1.80	50	7.96	60	0.650	390
GWI-453232-2R2	2.20	50	7.96	55	0.700	380
GWI-453232-2R7	2.70	50	7.96	50	0.750	370
GWI-453232-3R3	3.30	50	7.96	45	0.800	355

SPECIFICATION FOR APPROVAL

PROD. NAME	WOUND CHIP INDUCTOR	DWG. NO: GWI-453232-□□□□

V ．ELECTRICAL CHARACTERISTICS：

Tolerance J=±5%，K=±10%，M=±20%

Part Number	Inductance(μH)	Q Min	LQ Test Frequency（MHz）.	Self Resonant Frequency（MHz）Min.	DC Resistance Rdc（Ω）Max.	Rated Current Idc（mA）Max.
GWI-453232-3R9	3.90	50	7.96	40	0.900	330
GWI-453232-4R7	4.70	50	7.96	35	1.000	315
GWI-453232-5R6	5.60	50	7.96	33	1.100	300
GWI-453232-6R8	6.80	50	7.96	27	1.200	285
GWI-453232-8R2	8.20	50	7.96	25	1.400	270
GWI-453232-100	10.00	50	2.52	20	1.600	250
GWI-453232-120	12.00	50	2.52	18	2.000	225
GWI-453232-150	15.00	50	2.52	17	2.500	200
GWI-453232-180	18.00	50	2.52	15	2.800	190
GWI-453232-220	22.00	50	2.52	13	3.200	180
GWI-453232-270	27.00	50	2.52	12	3.600	170
GWI-453232-330	33.00	50	2.52	11	4.000	160
GWI-453232-390	39.00	50	2.52	10	4.500	150
GWI-453232-470	47.00	50	2.52	10	5.000	140
GWI-453232-560	56.00	50	2.52	9.0	5.500	135
GWI-453232-680	68.00	50	2.52	9.0	6.000	130
GWI-453232-820	82.00	50	2.52	8.0	7.000	120
GWI-453232-101	100.00	40	0.796	8.0	8.000	110
GWI-453232-121	120.00	40	0.796	6.0	8.000	110

G-CHEN ENTERPRISE CO;LTD

SPECIFICATION FOR APPROVAL

PROD. NAME	WOUND CHIP INDUCTOR	DWG. NO: GWI-453232-□□□□

V ．ELECTRICAL CHARACTERISTICS：

Tolerance J=±5%，K=±10%，M=±20%

Part Number	Inductance(μH)	Q Min	LQ Test Frequency（MHz）.	Self Resonant Frequency（MHz）Min.	DC Resistance Rdc（Ω）Max.	Rated Current Idc（mA）Max.
WI-453232-151	150.00	40	0.796	5.0	9.000	105
GWI-453232-181	180.00	40	0.796	5.0	9.500	102
GWI-453232-221	220.00	40	0.796	4.0	10.000	100
GWI-453232-271	270.00	40	0.796	4.0	12.000	92
GWI-453232-331	330.00	40	0.796	3.5	14.000	85
GWI-453232-391	390.00	40	0.796	3.0	18.000	80
GWI-453232-471	470.00	40	0.796	3.0	26.000	62
GWI-453232-561	560.00	30	0.796	3.0	30.000	50
GWI-453232-681	680.00	30	0.796	3.0	30.000	50
GWI-453232-821	820.00	30	0.796	2.5	35.000	30
WI-453232-102	1.00mH	20	0.252	2.5	40.000	30

G-CHEN ENTERPRISE CO;LTD.

SPECIFICATION FOR APPROVAL

PROD. NAME	WOUND CHIP INDUCTOR	DWG. NO: GWI-453232-□□□□

Ⅵ · PACKAGING INFORMATION :

- CONFIGURATION

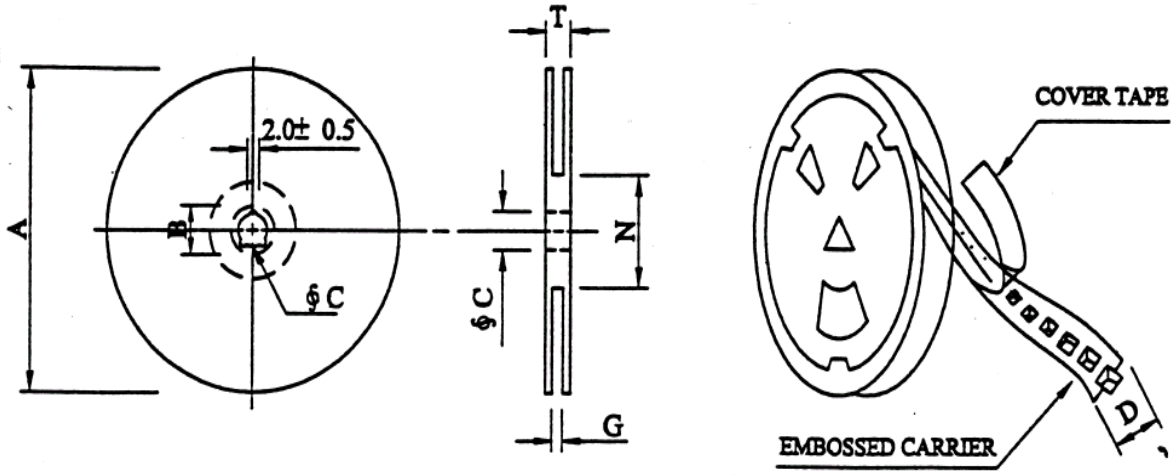

※CARRIER TAPE WIDTH : D

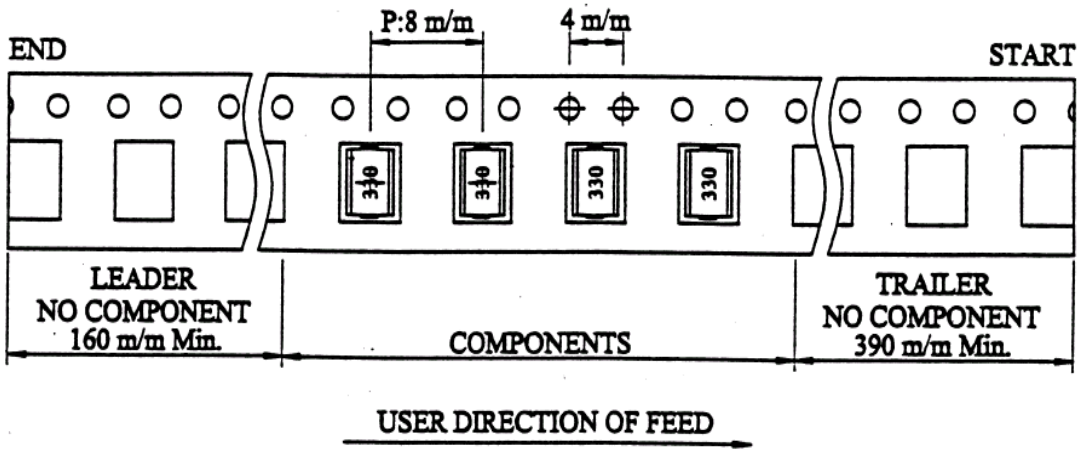

- DIMENSIONS Unit：m/m

A	B	C	D	G	N	T	PACKING
178	21±0.8	13	12	14 +0	50 -0	16.5	500 PCS / REEL

SPECIFICATION FOR APPROVAL

PROD. NAME	WOUND CHIP INDUCTOR	DWG. NO:GWI-453232-□□□□

Ⅶ・DWG EXPRESSION :

W	I	-	4	5	3	2	3	2	-				

TYPE CODE

DIMENSION CODE

ELECTRICAL CODE

TOLERANCE CODE

G-CHEN ENTERPRISE CO;LTD.

SPECIFICATION FOR APPROVAL

PROD. NAME	WOUND CHIP INDUCTOR	DWG. NO: GWI-453232-□□□□

Ⅷ．RELIABILITY TEST :

TEST ITEM	SPECIFICATION	TEST CONDITION / TEST METHOD
● ELECTRICAL PERFORMANCE TEST		
INDUCTANCE L	REFER TO STANDARD ELECTRICAL CHARACTERISTIC LIST	Q-METER:HP4342A，□HP4194A，□HPE4991A
Q		IMPEDANCE ANALYZER:□HP4194A，□HPE4991A
SELF RESONANCE FREQUENCY SRF		WHEATSTONE BRIDGE:□YEW-2755 DIGITAL MULITMETER:□502BC
DC RESISTANCE RDC		APPLIED THE CURRENT TO COILS，THE INDUCTANCE CHANGE SHALL BE LESS THAN 10% TO INTTIAL VALUE&TEMPERATURE RISE SHALL NOT BE MORE THAN 20℃
RATED CURRENT IDC		
TEMPERATURE RISE TEST	20℃ MAX	1. APPLIED THE ALLOWED DC CURRENT FOR 10 MINUTES 2. TEMPERATURE MEASURE BY DIGITAL SURFACE THERMOMETER
OVER LOAD TEST	AFTER TEST , INDUCTORS SHALL BE NO EVIDENCE OF ELECTRICAL AND MECHANICAL DAMAGE	APPLIED 2 TIMES OF RATED ALLOWED DC CURRENT TO INDUCTOR FOR A PERIOD OF 5 MINUTES
WITHSTANDING VOLTAGE TEST	AFTER TEST , INDUCTORS SHALL BE NO EVIDENCE OF ELECTRICAL AND MECHANICAL DAMAGE	ACVOLTAGE OF 1000VAC APPLIED BETWEEN INDUCTORS TERMINAL AND CASE FOR 1 MINUTE
INSULATION RESISTANCE TEST	1000 MOHM MIN.	250 VDC APPLIED BETWEEN INDUCTOR TERMINAL AND CASE
● MECHANICAL PERFORMANCE TEST		
VIBRATION TEST (LOW FREQUENCY)	1. INDUCTORS SHALL BE NO EVIDENCE OF ELECTRICAL AND MECHANICAL DAMAGE 2. INDUCTANCE SHALL NOT CHANGE MORE THAN±5% 3. Q SHALL NOT CHANGE MORE THAN±20%	1. AMPLITUDE：1.5m/m 2. FREQUENCY：10…55…10HN/1MIN 3. DIRETION：X，Y，Z 4. DURATION：2HRS/X，Y，Z
SHOCK TEST		INDUCTORS SHALL BE DROPPED 10 TIMES FROM A HEIGHT OF 1m ONTO 3cm WOODEN BOARD
RESISTANCE TO SOLDERING HEAT		TEMP：260±5℃ TIME：10±1.0 SEC

G-CHEN ENTERPRISE CO;LTD.

SPECIFICATION FOR APPROVAL

PROD. NAME	WOUND CHIP INDUCTOR	M.M. DWG. NO: GWI-453232-□□□□

TERMINAL STRENGTH-PULL TEST	TERMINAL SHALL NOT BE LOOSENED OR RUPTURED	A 1KG LOAD SHALL BE APPLIED TO BOTH TERMINALS IN THE AXIS DIRECTION FOR 1 MINUTE.(0.5KG FOR WI-453232 SERIES)
SOLDERABILITY TEST	THE TERMINAL SHALL BE AT LEAST 90% COVERED WITH SOLDER	AFTER FLUXING，INDUCTOR SHALL BE DIPPED IN A MELTED SOLDER BATH AT 230±5℃ FOR 5 SECONDS.
RESISTANCE TO SOLVENT TEST	THERE SHALL BE NO CASE DEFORMATION CHANGE IN APPEARANCE OR OBLITERATION OF MARKING	MIL-STD-202F，METHOD 215D
● CLIMATIC TEST		
TEMPERATURE CHARACTERISTIC	1. INDUCTORS SHALL BE NO EVIDENCE OF ELECTRICAL AND MECHANICAL DAMAGE 2. INDUCTANCE SHALL NOT CHANGE MORE THAN ±10% 3. Q SHALL NOT CHAMGE MORE THAN ±20%	-25℃…85℃
HUMIDITY TEST		1. TEMP：40±2℃ 2. R.H.：90…95% 3. TIME：96±2 HOURS
COLD TEST		1. TEMP：-25±2℃ 2. TIME：96±2HOURS
THERMAL SHOCK TEST		→ ROOM TEMP 15 MINS → -25±2℃ 30 MINS → ROOM TEMP 15 MINS → 85±2℃ 30 MINS → TOTAL：5 CYCLES
DRY HEAT TEST		1. TEMP：85±2℃ 2. TIME：96±2HOURS
HIGH TEMPERATURE LOAD LIFE TEST	THERE SHALL BE NO EVIDENCE OF SHORT OR OPEN CIRCUTTING	1. TEMP：85±2℃ 2. TIME：1000±12HOURS 3. LOAD：ALLOWED DC CURRENT
HUMIDITY OLAD LIFE		1. TEMP：40±2℃ 2. R.H.：90…95% 3. TIME：1000±12 HOURS 4. LOAD：ALLOWED DC CURRENT
● NOTE： UNLESS OTHER WISE SPECIFIED，ALLOW THE SPECIMEN TO STAND AT ROOM TEMPERATURE FOR 1 HOUR OR MORE BUT MORE THAN 2 HOURS，MEASURE THE ELECTRICAL AND MECHANICAL PERFORMANCES		

G-CHEN ENTERPRISE CO;LTD.